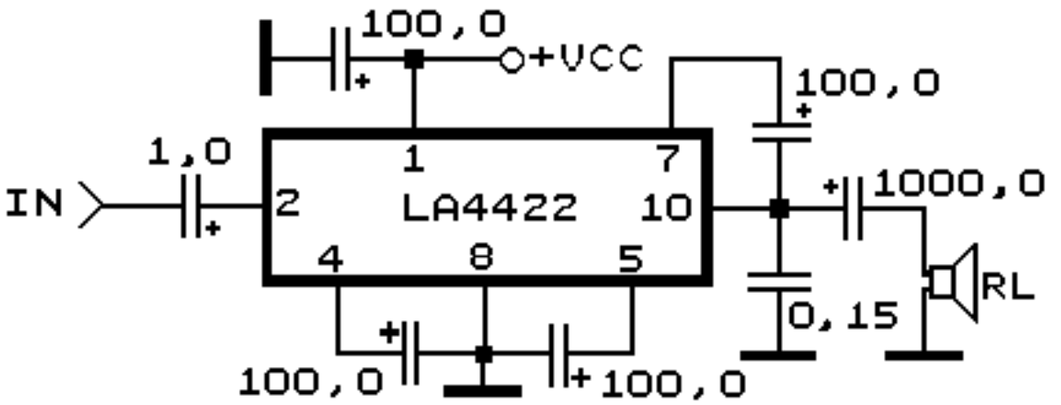
100,0
+VCC
100,0
1,0
1
7
IN
2
LA4422
10
1000,0
4
8
5
RL
0,15
100,0
100,0

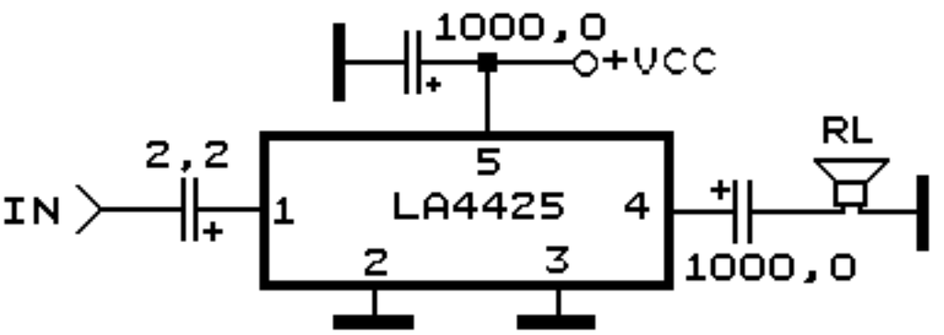
1000,0
+VCC
RL
2,2
5
IN
1
LA4425
4
2
3
1000,0

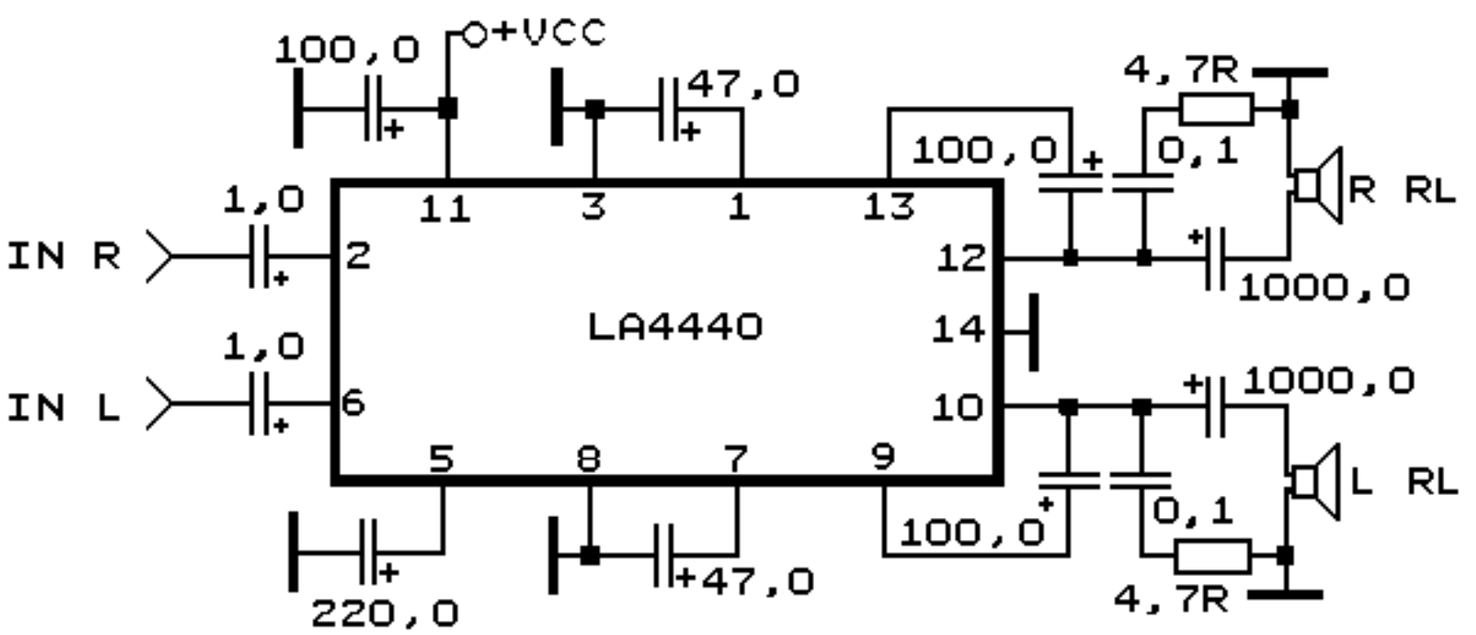
100,0
+VCC
47,0
4,7R
100,0
0,1
1,0
11
3
1
13
R RL
IN R
2
12
1000,0
LA4440
14
1,0
IN L
6
10
1000,0
5
8
7
9
L RL
0,1
100,0
220,0
47,0
4,7R

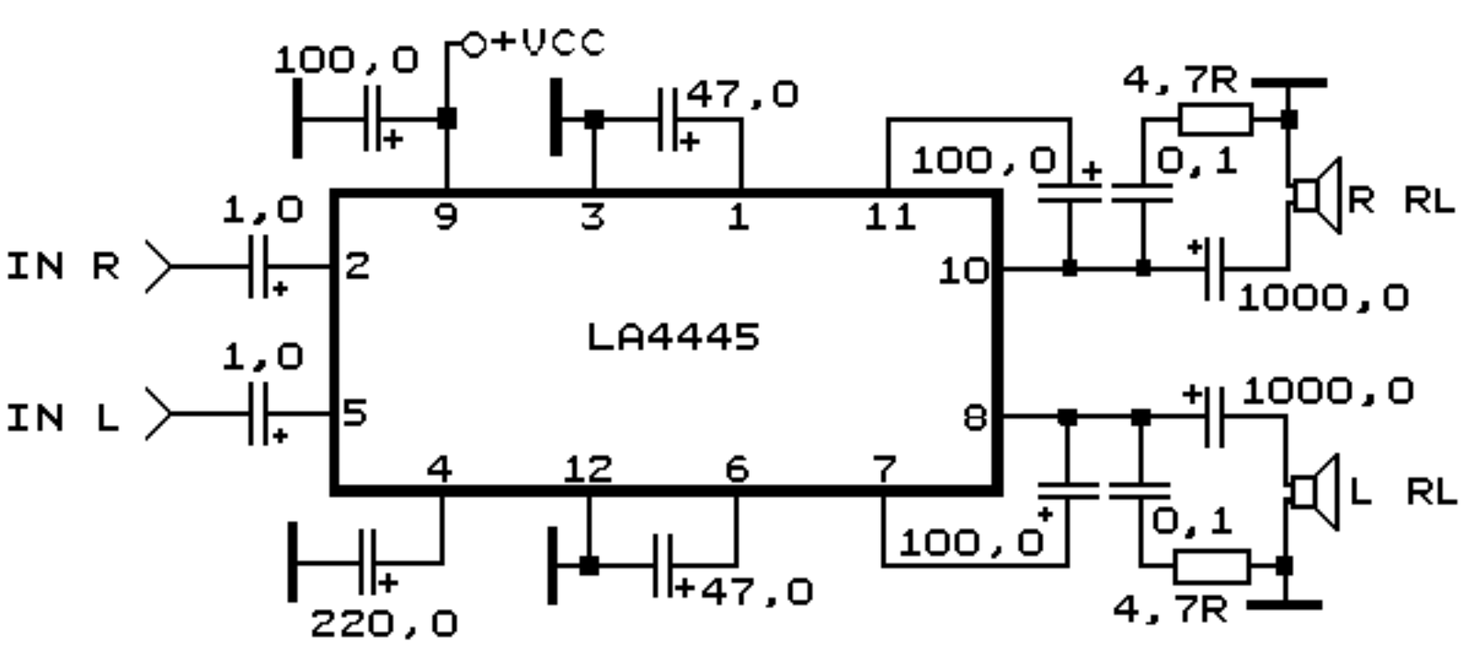
100,0
+VCC
47,0
4,7R
100,0
0,1
1,0
9
3
1
11
R RL
IN R
2
10
1000,0
LA4445
1,0
IN L
5
8
1000,0
4
12
6
7
L RL
0,1
100,0
220,0
47,0
4,7R