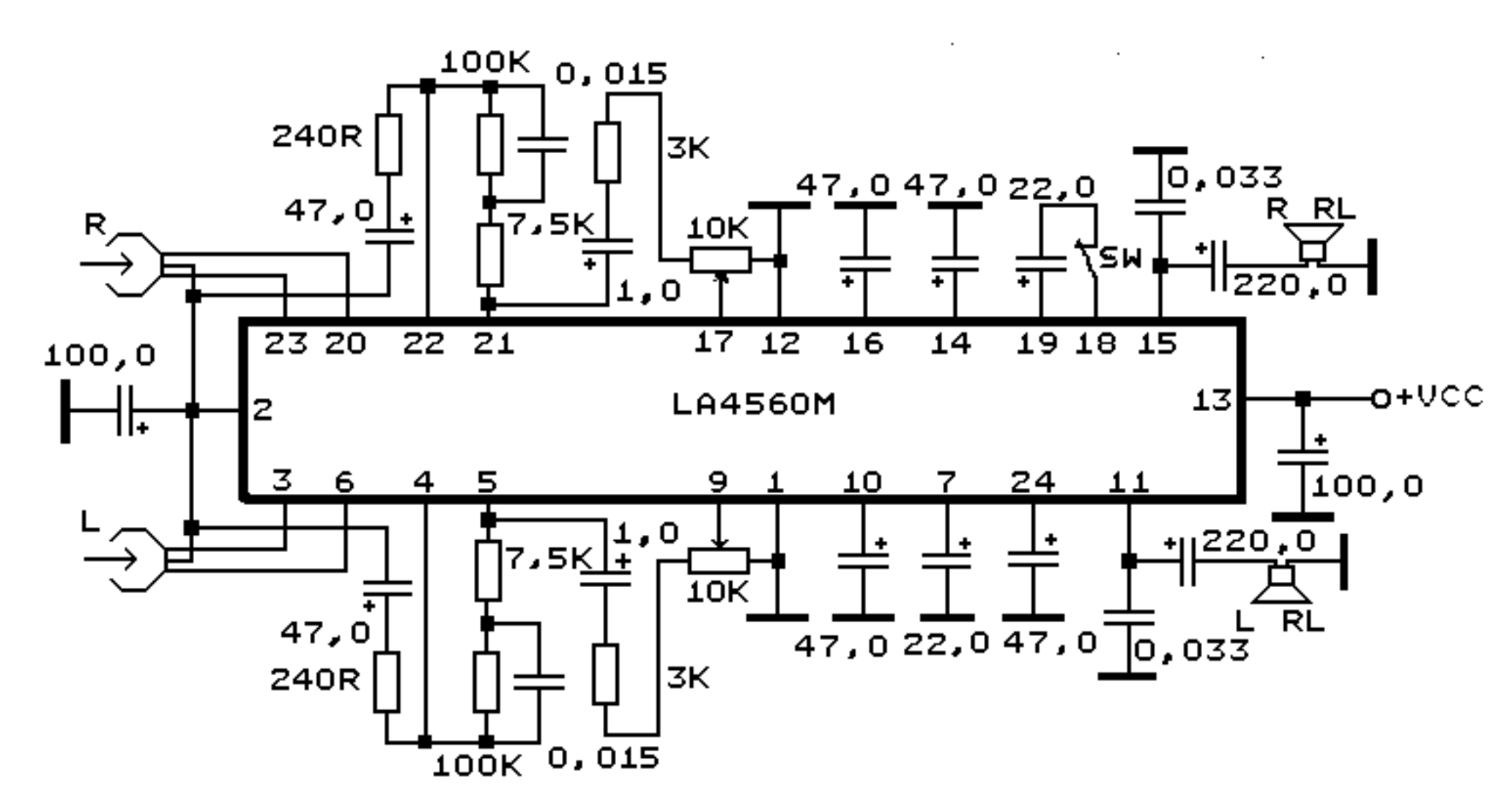
100K
0,015
240R
3K
47,0
7,5K
10K
47,0
47,0
22,0
0,033
R
RL
SW
220,0
1,0
23 20 22 21 17 12 16 14 19 18 15
100,0
2
LA4560M
13
+VCC
3 6 4 5 9 1 10 7 24 11
100,0
L
1,0
7,5K
10K
220,0
47,0
47,0 22,0 47,0
0,033
L
RL
240R
3K
100K
0,015

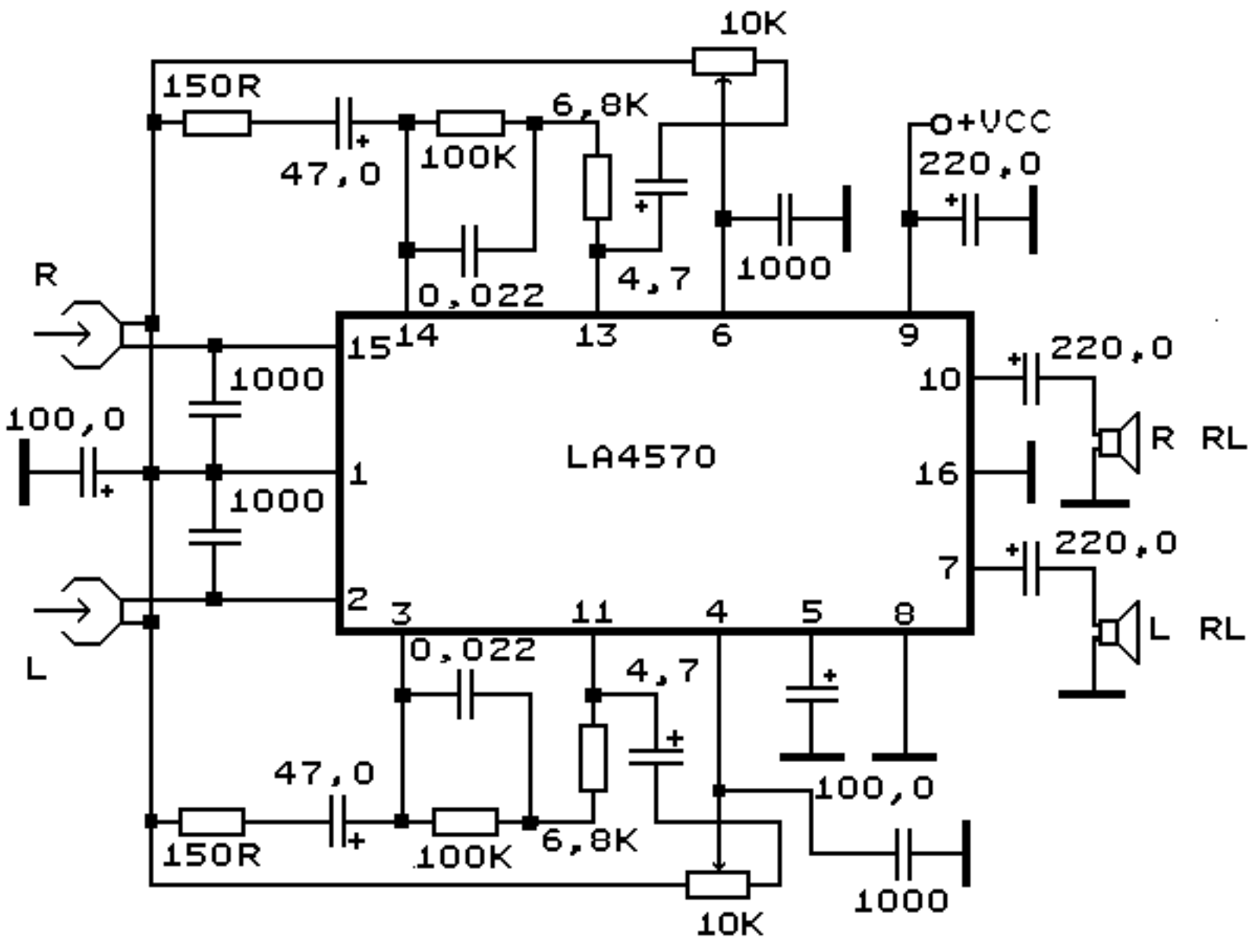
10K
150R
6,8K
+VCC
47,0
100K
220,0
R
0,022
4,7
1000
15 14 13 6 9
220,0
1000
10
100,0
R RL
LA4570
16
1
1000
220,0
7
2 3 11 4 5 8
L
L RL
0,022
4,7
47,0
100,0
150R
100K
6,8K
1000
10K