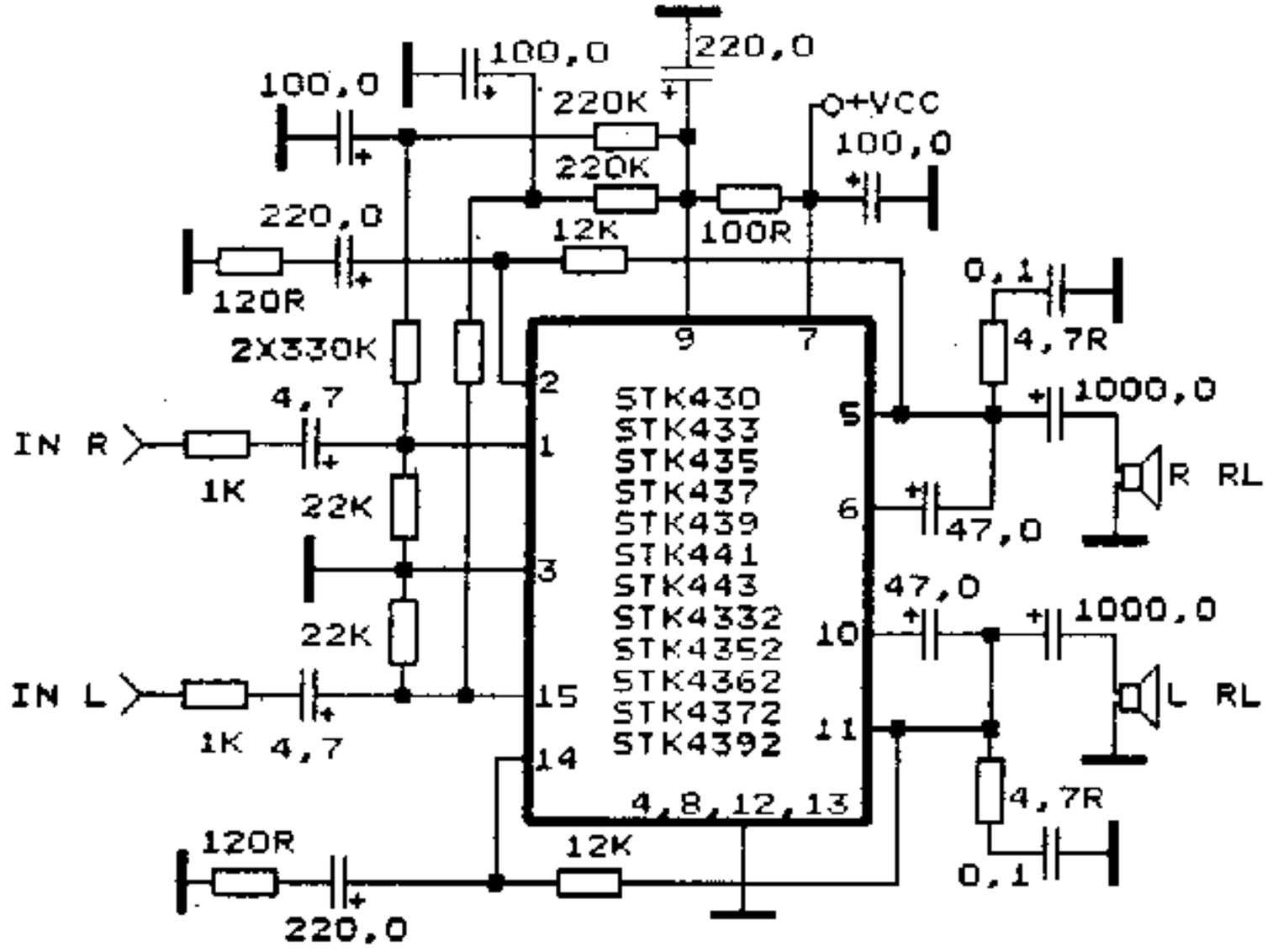
100,0
100,0
220,0
220K
220K
+VCC
100,0
220,0
12K
100R
120R
0,1
2X330K
4,7R
9
7
2
STK430
STK433
STK435
STK437
STK439
STK441
STK443
STK4332
STK4352
STK4362
STK4372
STK4392
5
1000,0
4,7
IN R
1
1K
R RL
22K
6
47,0
3
47,0
1000,0
22K
10
IN L
15
L RL
1K
4,7
11
14
4,8,12,13
4,7R
120R
12K
0,1
220,0

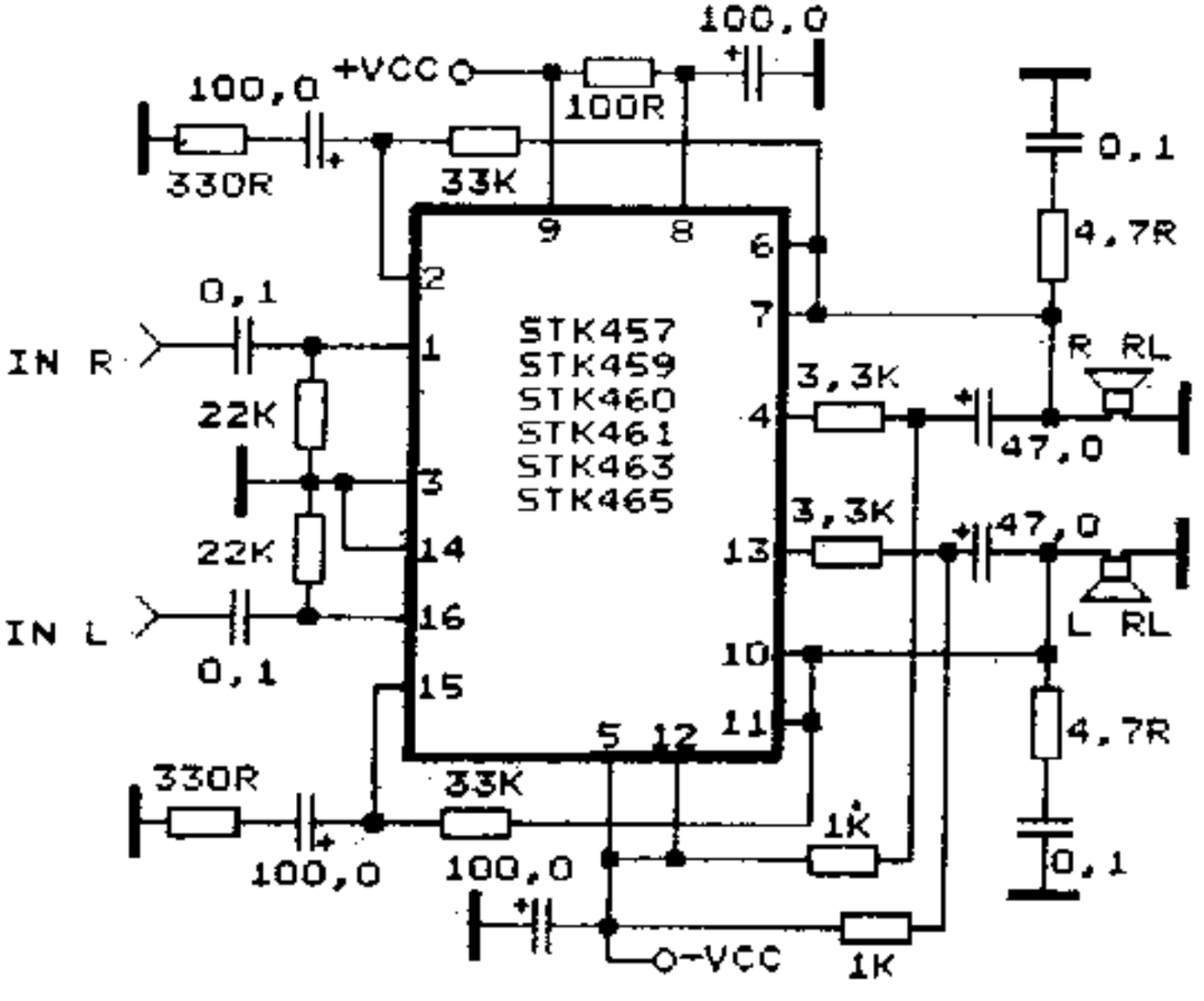
100,0
+VCC
100,0
100R
330R
33K
0,1
9
8
6
4,7R
2
0,1
7
STK457
STK459
STK460
STK461
STK463
STK465
IN R
1
R RL
3,3K
22K
4
47,0
3
3,3K
47,0
22K
14
13
IN L
16
L RL
0,1
10
15
4,7R
5
12
11
330R
33K
1K
0,1
100,0
100,0
-VCC
1K