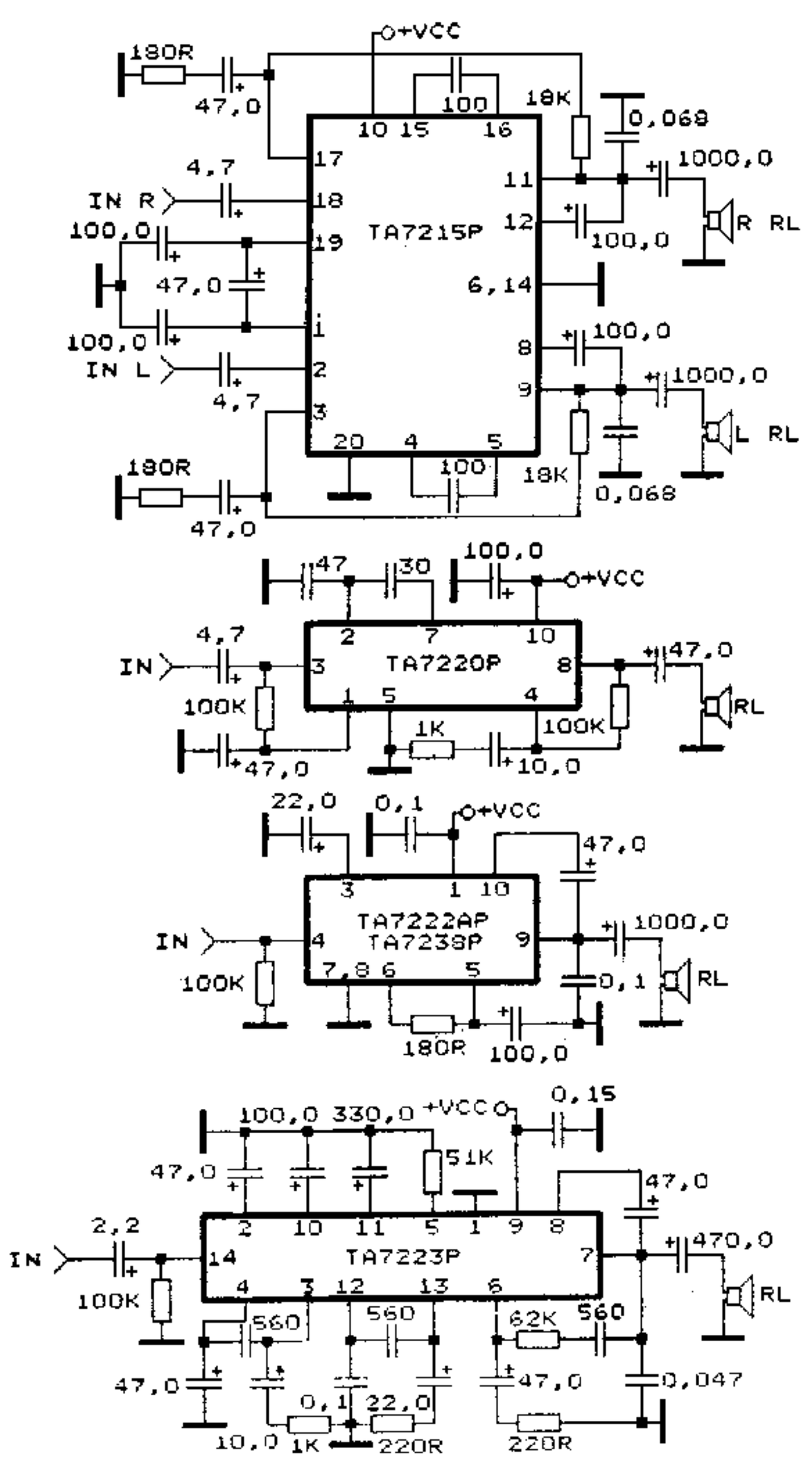
+VCC
180R
47,0
100
18K
0,068
10 15 16
17
4,7
IN R
18
11
1000,0
100,0
19
TA7215P
12
100,0
R RL
47,0
6,14
100,0
1
100,0
8
IN L
2
9
1000,0
4,7
3
L RL
20 4 5
180R
100
18K
0,068
47,0
47
30
100,0
+VCC
4,7
2 7 10
IN
3
TA7220P
8
47,0
100K
1 5 4
1K
100K
RL
47,0
10,0
22,0
0,1
+VCC
47,0
3 1 10
TA7222AP
TA7238P
IN
4
9
1000,0
100K
7,8 6 5
0,1
RL
180R
100,0
0,15
100,0 330,0 +VCC
51K
47,0
47,0
2,2
2 10 11 5 1 9 8
IN
14
TA7223P
7
470,0
100K
4 3 12 13 6
RL
560
560
62K
560
47,0
47,0
0,047
0,1
22,0
10,0
1K
220R
220R